DIMENSION	TOLERANCE
BELOW 10 mm	± 0.3
10~100 mm	± 0.5
ABOVE 100 mm	± 0.8
ANGLE	± 3°

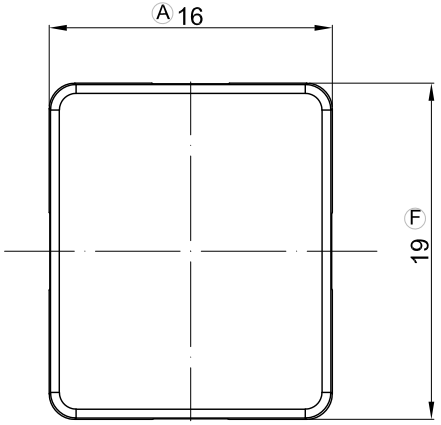

SPECIFICATION :

1. RATING : 20 VDC ; 1mA .
2. CONTACT RESISTANCE : 200Ω MAX .
3. INSULATION RESISTANCE : 100 V DC - 100 MΩ MIN .
4. WITHSTAND VOLTAGE : 250 V AC - 1 MINUTE .
5. OPERATING FORCE : 160 ± 40 gf .
6. LIFE CYCLE : 500,000 CYCLE .
7.CRITICAL DIMENSIONS : 'A' ~ 'G'

ACTIVE

ACTIVE HIGH(H)	ACTIVE LOW(L)

OPERATION

DIRECT MODE	TOGGLE MODE

CIRCUIT DIAGRAM

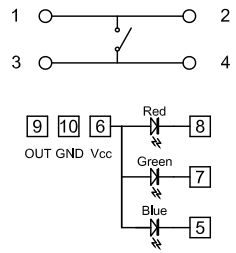

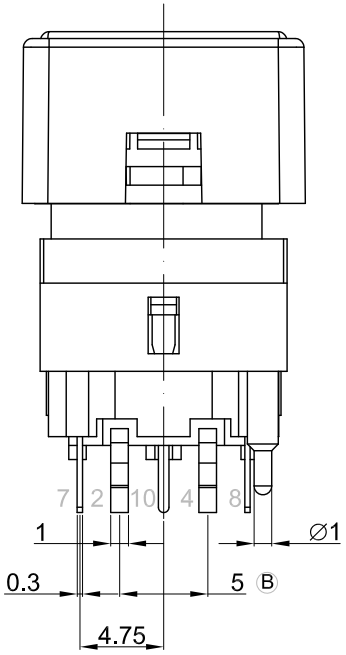

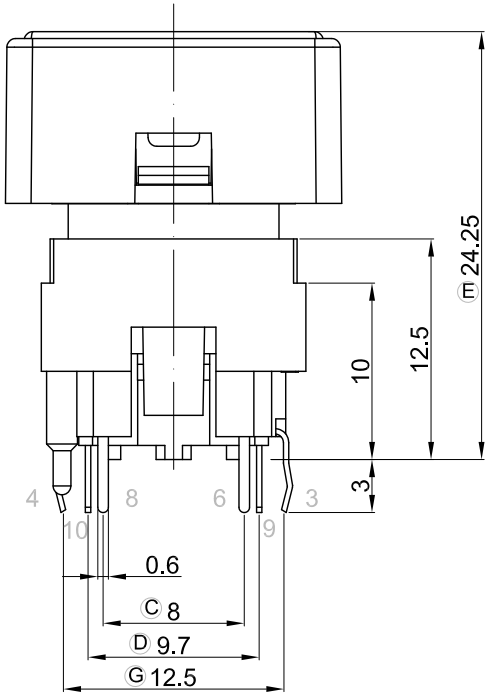

P.C.B. LAYOUT

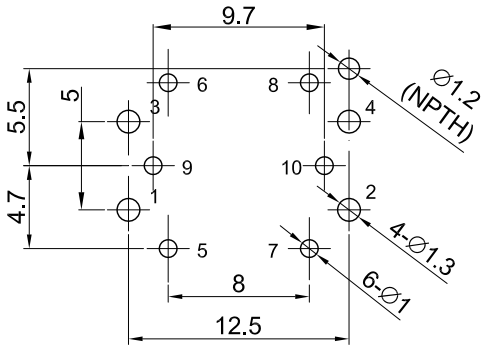

3					DATA	2018/1/17	UNIT	mm	MODE	TACT SWITCH	淮洋有限公司 HUAI YANG CO., LTD.
2					APPROVAL		SCALE	1 : 1	PART	TC016-TOUCH+PUSH	
1					CONFIRM		VIEW		2D FILE NAME	TC016-TOUCH+PUSH	
	DATA	APPROVAL	DESIGN	ENGINEERING CHANGE DESCRIPTION	DESIGN		VER.	01	3D FILE NAME		